BHR241Z - Akkuporavasara

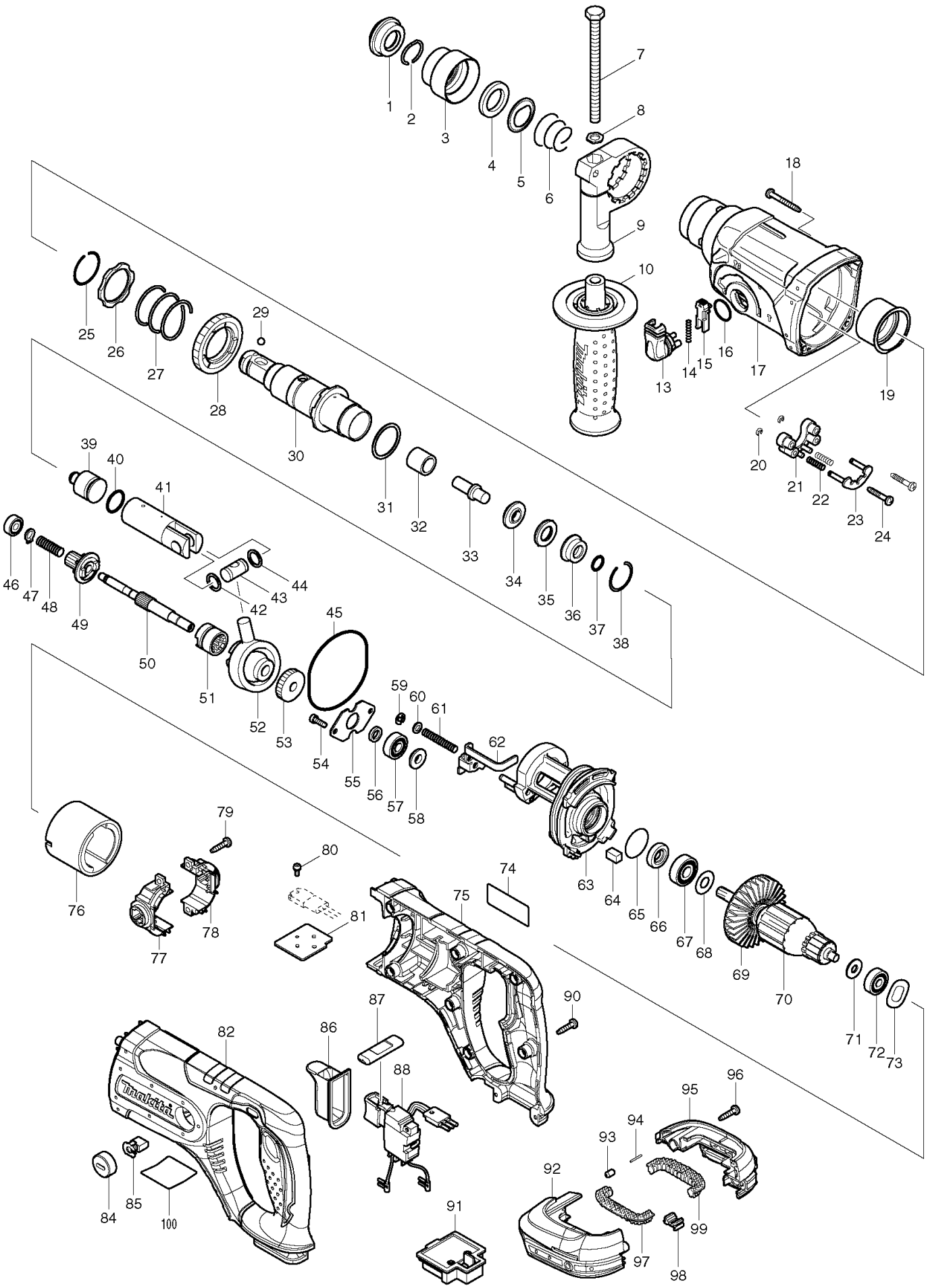

1	286263-4	CAP 35
2	233940-9	RING SPRING 19
3	417629-9	CHUCK COVER
4	257241-1	RING 21
5	345187-4	GUIDE WASHER
6	233916-6	CONICAL COMP. SPRING 21-29
7	921923-8	HEX. BOLT M8X120
8	345280-4	HEX. WASHER
9	417630-4	GRIP BASE
10	158057-6	GRIP 36 COMPLETE
13	162245-9	CHANGE LEVER
14	233459-8	COMPRESSION SPRING 3
15	419192-8	LOCK BUTTON
16	213278-8	O RING 17
17	158216-2	GEAR HOUSING COMPLETE
18	266351-3	TAPPING SCREW 4X35
19	153290-5	NEEDLE BEARING COMPLETE
20	961017-7	STOP RING E-3
21	417796-0	GUIDE BASE
22	233344-5	COMPRESSION SPRING 4
23	163430-7	LOCK PLATE COMPLETE
24	266374-1	TAPPING SCREW 4X25
25	233929-7	RING SPRING 29
26	267791-8	WASHER 31
27	233401-9	COMPRESSION SPRING 32
28	227109-5	SPUR GEAR 51
29	216022-2	STEEL BALL 7.0
30	158574-6	TOOL HOLDER COMPLETE
31	267229-3	FLAT WASHER 28
32	331769-8	SLEEVE 9
33	324669-9	IMPACT BOLT
34	324402-9	RING 10
35	421955-0	CUSHION RING 13
36	324216-6	O RING CASE
37	213073-6	O RING 9
38	233917-4	RING SPRING 28
39	324214-0	STRIKER
40	213227-5	O RING 16
41	318132-2	PISTON CYLINDER
42	267104-3	FLAT WASHER 12
43	324215-8	PISTON JOINT
44	267104-3	FLAT WASHER 12
45	213727-5	O-RING 63
46	211012-0	BALL BEARING 606ZZ
47	961003-8	RETAINING RING S-7
48	233343-7	COMPRESSION SPRING 7
49	227179-4	SPUR GEAR 10
50	324668-1	CAM SHAFT
51	331768-0	CLUTCH CAM

52	219014-0	SWASH BEARING 10
53	226632-7	HELICAL GEAR 25
54	266273-7	HEX. SOCKET HEAD BOLT M4X12
55	345179-3	BEARING RETAINER
56	267234-0	FLAT WASHER 8
57	211032-4	BALL BEARING 608ZZ
58	324212-4	RING 8
59	961011-9	STOP RING E-4
60	941102-2	FLAT WASHER 5
61	233342-9	COMPRESSION SPRING 6
62	345363-0	CHANGE PLATE
63	158215-4	INNER HOUSING COMPLETE
64	443126-9	FELT
65	213407-3	O RING 26
66	213077-8	OIL SEAL 10
67	210059-1	BALL BEARING 6000DDW
68	267213-8	FLAT WASHER 10
70	519226-8	ARMATURE ASS'Y 18V
71	253823-7	FLAT WASHER 7
72	210023-2	BALL BEARING 627DDW
73	267816-8	WAVE WASHER 15
74	865819-2	BHR241 NAME PLATE 20MM
75	188577-6	HOUSING SET
76	638020-0	YOKE UNIT
77	643836-0	BRUSH HOLDER
78	643837-8	BRUSH HOLDER
79	266326-2	TAPPING SCREW 4X18
80	911006-2	PAN HEAD SCREW M3X8
81	689070-8	HEAT SINK
82	188577-6	HOUSING SET
84	643829-7	HOLDER CAP
85	194435-6	CARBON BRUSH CB-441
86	424111-1	SWITCH COVER
87	450615-7	F/R CHANGE LEVER
88	650587-8	SWITCH TG553FSB-7
90	266326-2	TAPPING SCREW 4X18
91	643838-6	TERMINAL
92	188453-4	BATTERY HOUSING SET
93	263036-2	RUBBER PIN 5
94	268184-2	PIN 1.5
95	188453-4	BATTERY HOUSING SET
96	266326-2	TAPPING SCREW 4X18
97	424042-4	CUSHION RUBBER
98	424026-2	CUSHION
99	424042-4	CUSHION RUBBER
100	814974-7	BHR241 SERIAL NUMBER LABEL

BHR241Z - Akkuporavasara

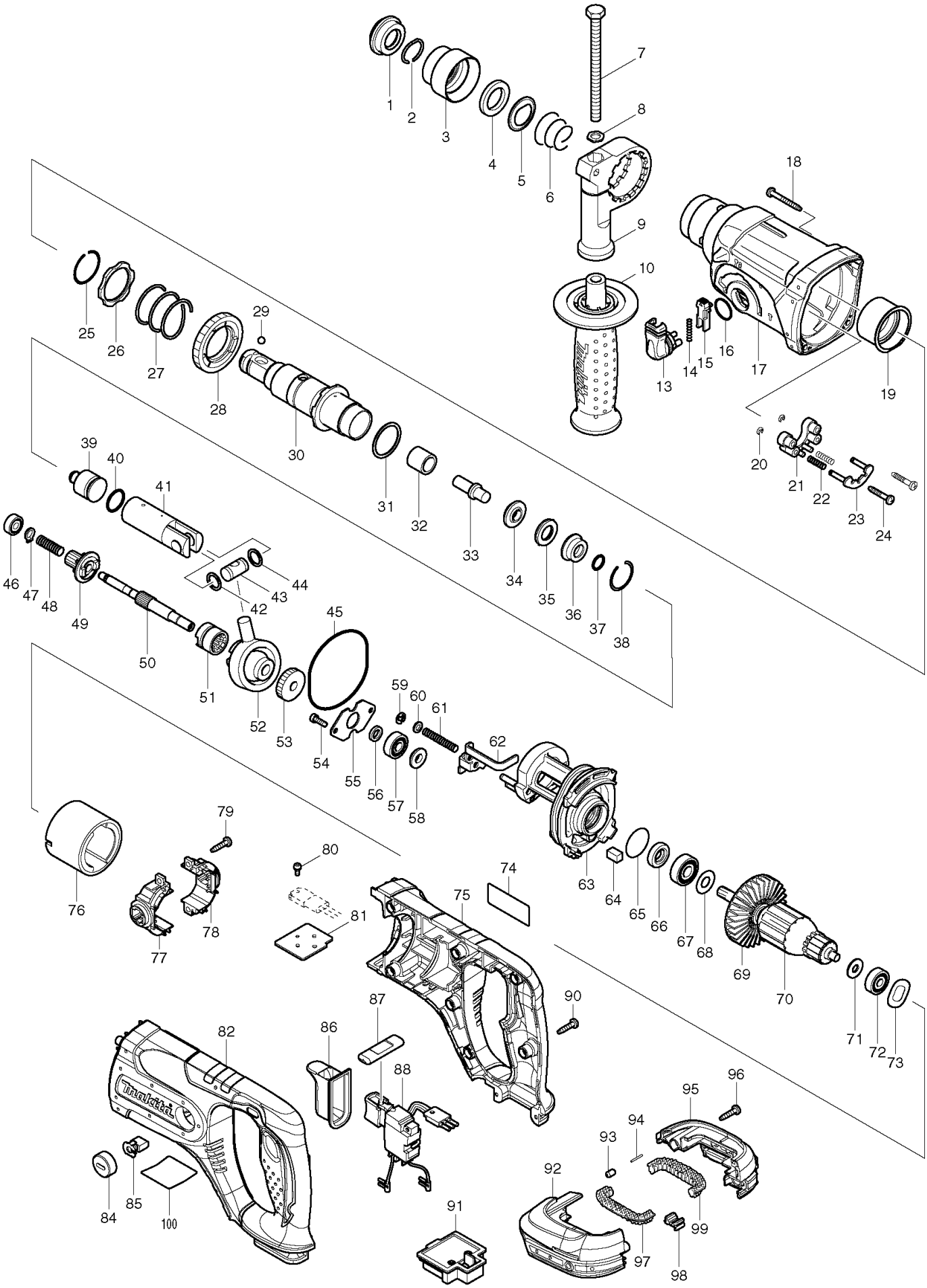

1	286263-4	CAP 35
2	233940-9	RING SPRING 19
3	417629-9	CHUCK COVER
4	257241-1	RING 21
5	345187-4	GUIDE WASHER
6	233916-6	CONICAL COMP. SPRING 21-29
7	921923-8	HEX. BOLT M8X120
8	345280-4	HEX. WASHER
9	417630-4	GRIP BASE
10	158057-6	GRIP 36 COMPLETE
13	162245-9	CHANGE LEVER
14	233459-8	COMPRESSION SPRING 3
15	419192-8	LOCK BUTTON
16	213278-8	O RING 17
17	158216-2	GEAR HOUSING COMPLETE
18	266351-3	TAPPING SCREW 4X35
19	153290-5	NEEDLE BEARING COMPLETE
20	961017-7	STOP RING E-3
21	417796-0	GUIDE BASE
22	233344-5	COMPRESSION SPRING 4
23	163430-7	LOCK PLATE COMPLETE
24	266374-1	TAPPING SCREW 4X25
25	233929-7	RING SPRING 29
26	267460-1	WASHER 31
27	233401-9	COMPRESSION SPRING 32
28	227109-5	SPUR GEAR 51
29	216022-2	STEEL BALL 7.0
30	158574-6	TOOL HOLDER COMPLETE
31	267229-3	FLAT WASHER 28
32	331769-8	SLEEVE 9
33	324669-9	IMPACT BOLT
34	324402-9	RING 10
35	421955-0	CUSHION RING 13
36	324216-6	O RING CASE
37	213073-6	O RING 9
38	233917-4	RING SPRING 28
39	324214-0	STRIKER
40	213227-5	O RING 16
41	318132-2	PISTON CYLINDER
42	267104-3	FLAT WASHER 12
43	324215-8	PISTON JOINT
44	267104-3	FLAT WASHER 12
45	213727-5	O-RING 63
46	211012-0	BALL BEARING 606ZZ
47	961003-8	RETAINING RING S-7
48	233343-7	COMPRESSION SPRING 7
49	227179-4	SPUR GEAR 10
50	324668-1	CAM SHAFT
51	331992-5	CLUTCH CAM

52	219014-0	SWASH BEARING 10
53	226632-7	HELICAL GEAR 25
54	266273-7	HEX. SOCKET HEAD BOLT M4X12
55	345179-3	BEARING RETAINER
56	267234-0	FLAT WASHER 8
57	211032-4	BALL BEARING 608ZZ
58	324212-4	RING 8
59	961011-9	STOP RING E-4
60	941102-2	FLAT WASHER 5
61	233342-9	COMPRESSION SPRING 6
62	345363-0	CHANGE PLATE
63	141574-3	INNER HOUSING COMPLETE
64	443126-9	FELT
65	213407-3	O RING 26
66	213077-8	OIL SEAL 10
67	210059-1	BALL BEARING 6000DDW
68	267213-8	FLAT WASHER 10
70	519226-8	ARMATURE ASS'Y 18V
71	253823-7	FLAT WASHER 7
72	210023-2	BALL BEARING 627DDW
73	267816-8	WAVE WASHER 15
74	865819-2	BHR241 NAME PLATE 20MM
75	188577-6	HOUSING SET
76	638020-0	YOKE UNIT
77	638926-2	BRUSH HOLDER COMPLETE
78	643837-8	BRUSH HOLDER
79	266326-2	TAPPING SCREW 4X18
80	911006-2	PAN HEAD SCREW M3X8
81	689070-8	HEAT SINK
82	188577-6	HOUSING SET
84	643829-7	HOLDER CAP
85	194435-6	CARBON BRUSH CB-441
86	424111-1	SWITCH COVER
87	450615-7	F/R CHANGE LEVER
88	650655-7	SWITCH TG553FSB-7B
90	266326-2	TAPPING SCREW 4X18
91	643859-8	TERMINAL
92	187212-3	BATTERYHOUSING SET
93	263036-2	RUBBER PIN 5
94	268184-2	PIN 1.5
95	187212-3	BATTERYHOUSING SET
96	266326-2	TAPPING SCREW 4X18
97	424042-4	CUSHION RUBBER
98	424026-2	CUSHION
99	424042-4	CUSHION RUBBER
100	896519-3	BHR241 SERIAL NUMBER LABEL